Queen Mary
University of London
Science and Engineering

EBU4202: Digital Circuit Design
Tutorial Block 3

Dr. Md Hasanuzzaman Sagor (Hasan)
Dr. Chao Shu (Chao)
Dr. Farha Lakhani (Farha)
Dr. Fatma Benkhalifa (Fatma)

School of Electronic Engineering and Computer Science,
Queen Mary University of London,
London, United Kingdom.

Tutorials Block 3_2025

Q1. Draw the circuit diagram of a SR Latch with Control Input using only NAND gates.

Q2. Consider the circuit shown in Figure 2. Answer the following questions:

a. What is the name for this type of flip-flop?
b. Imagine that S now goes low. R = 0 and C = 1. Use your knowledge of the operation of gates to determine the new values of Q and QN
c. Imagine that C now goes low. S = 0 and R = 1. Use your knowledge of the operation of gates to determine the new values of Q and QN
d. Imagine that C now goes high. S = 1 and R = 0. Use your knowledge of the operation of gates to determine the new values of Q and QN

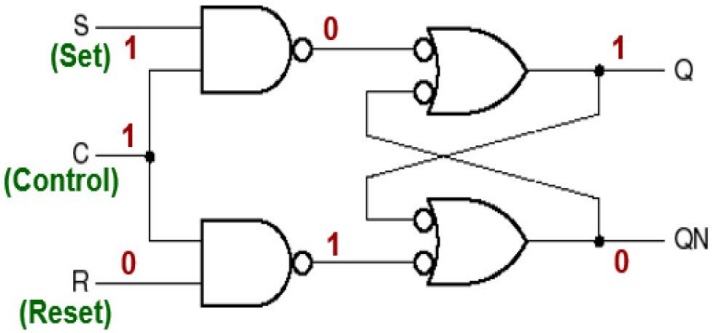

Tutorials Block 3_2025

Q3. Consider the circuit shown in Figure 3. Answer the following questions:

a. What is the name for this type of sequential circuit?
b. Imagine that C now goes high. D = 1. Use your knowledge of the operation of gates to determine the new values of Q and QN
c. Imagine that D now goes low. C = 1. Use your knowledge of the operation of gates to determine the new values of Q and QN
d. Imagine that C now goes low. D = 1. Use your knowledge of the operation of gates to determine the new values of Q and QN

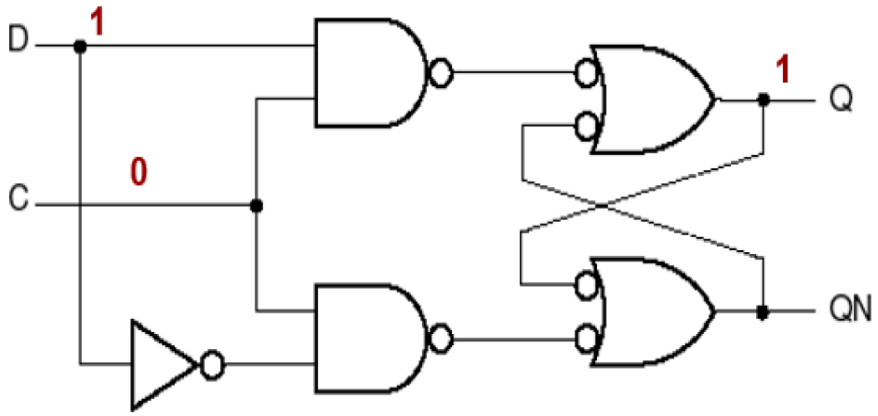

Tutorials Block 3_2025

Q4. What is a synchronous state machine?

Q5. In the context of bistable elements and state machines, what is meant by the term “metastability”?

Q6. Explain the difference between a Moore and Mealy machine.

Q7. What is the maximum clock frequency for a circuit having a maximum delay T_D? How can the circuit become unstable?

Tutorials Block 3_2025

Q8. Answer the following questions about the sequential circuit:
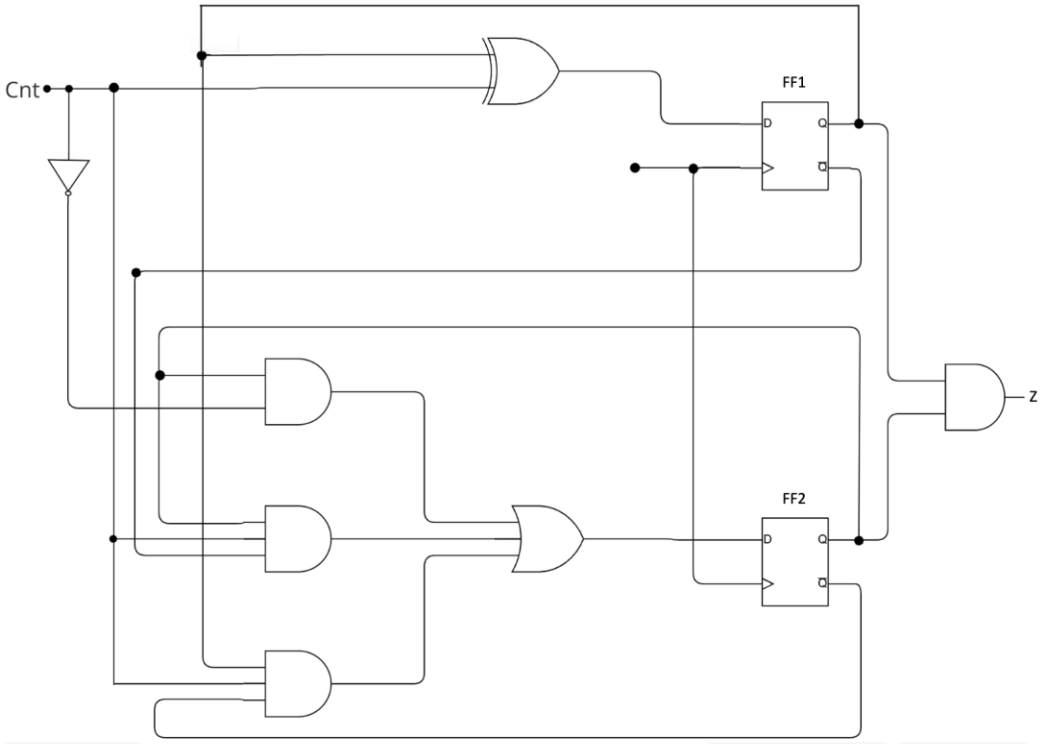
- Derive the ***input***, ***next state*** and ***output equations***.
- Derive the ***State Table*** and ***State Diagram***.
- What does the circuit do?